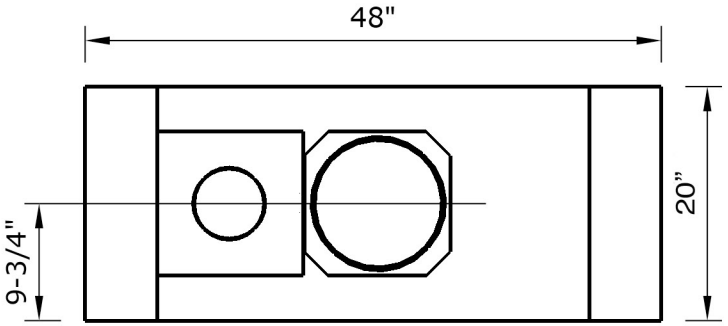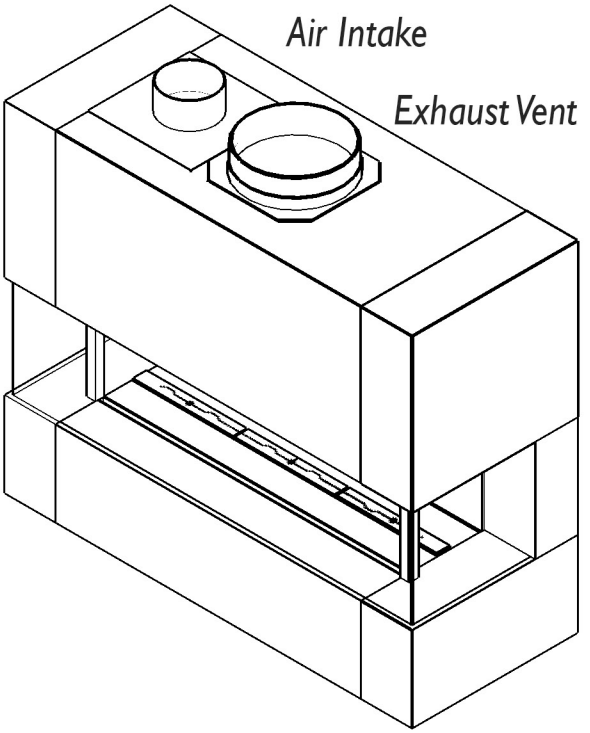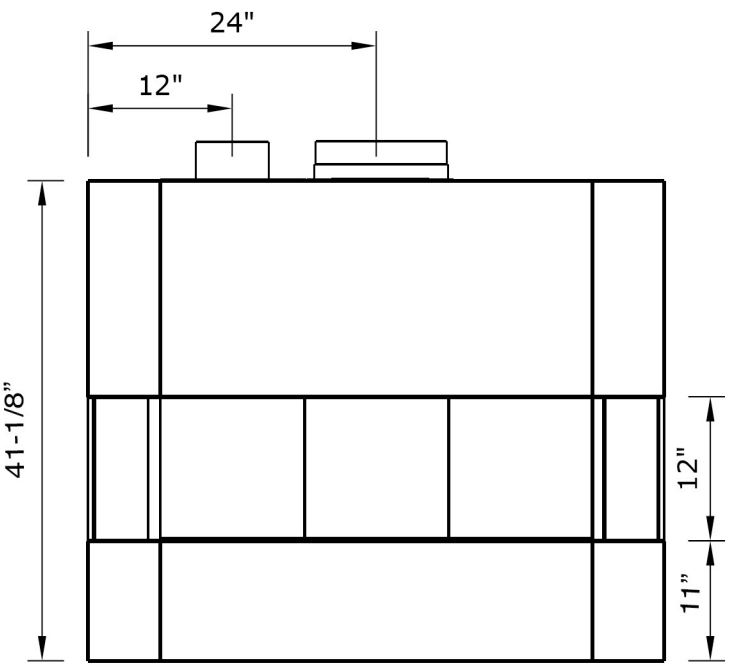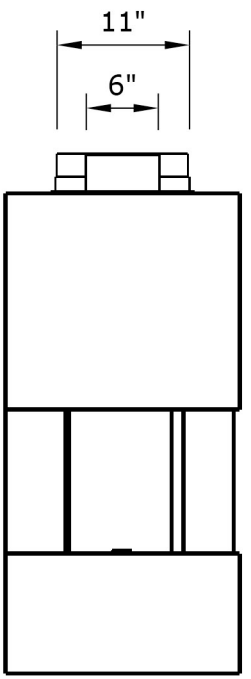DaVinci Custom Fireplace™
Bay - 4 Ft. x 12”